BUZZIBLOX

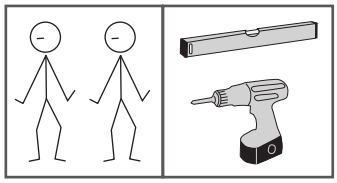

1.

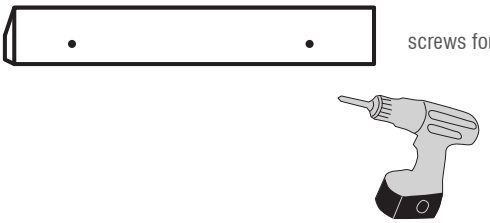

screws for wall not included

De Projectinrichter

www.deprojectinrichter.com
088 - 650 12 34

1 pc:

2.

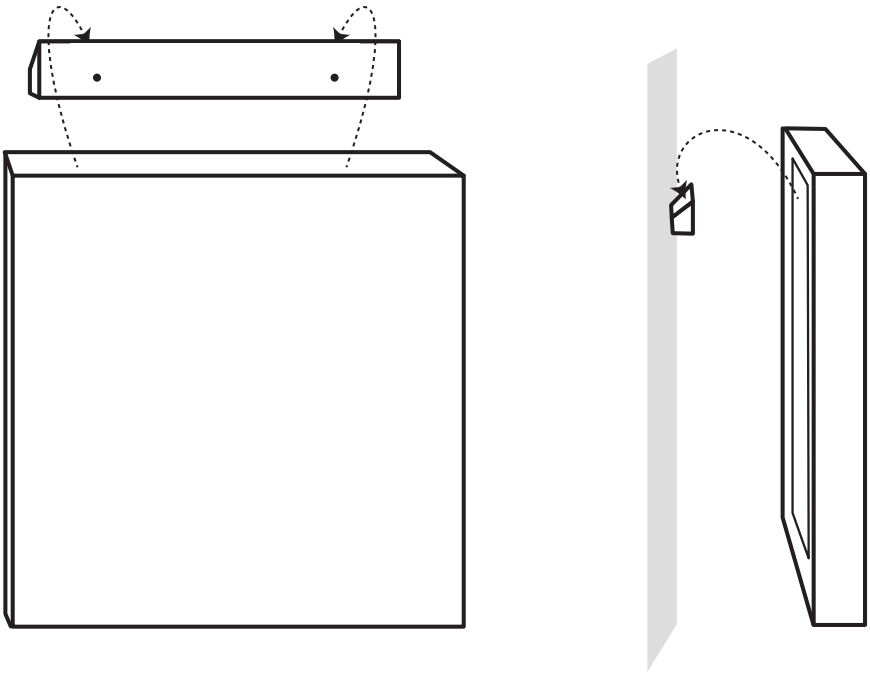

3.

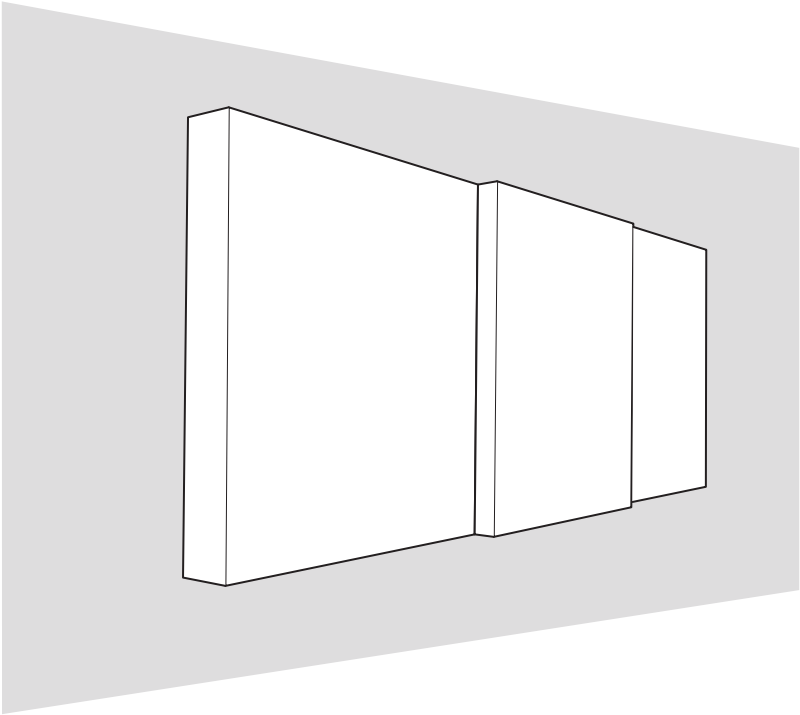

BUZZI SPACE

Errors and Omissions Excepted | Variation in colour, dimensions and density may occur!