De Projectinrichter

www.deprojectinrichter.com
088 - 650 12 34

Instructions

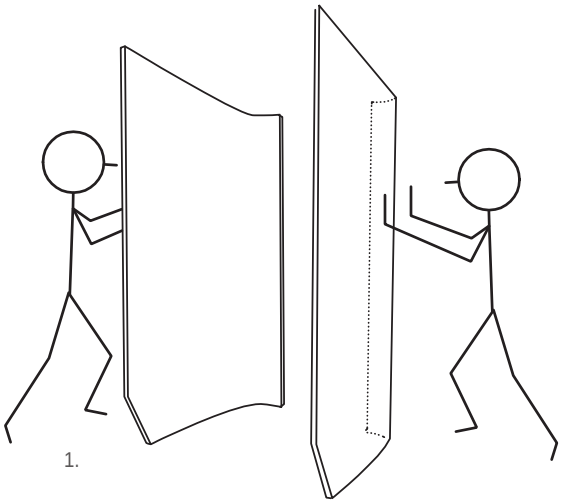

1.

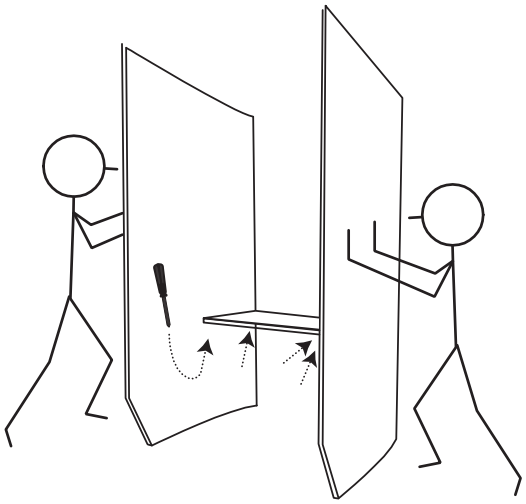

2.

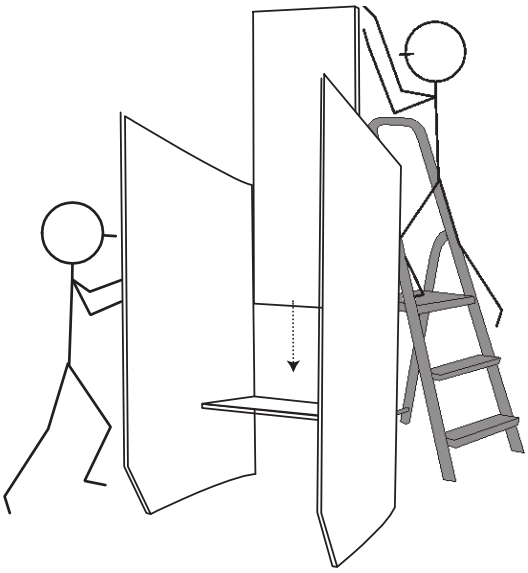

3.

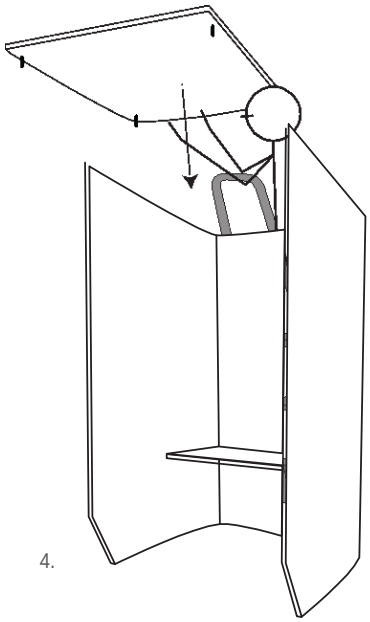

4.

BUZZI SPACE

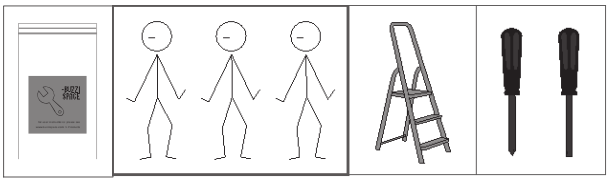

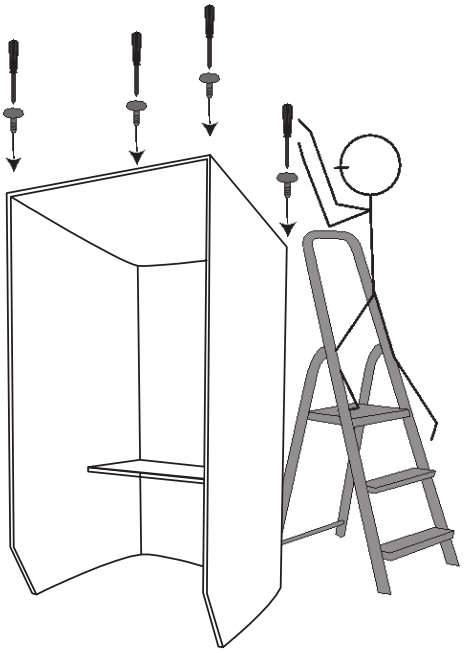

5.

option tablet + light

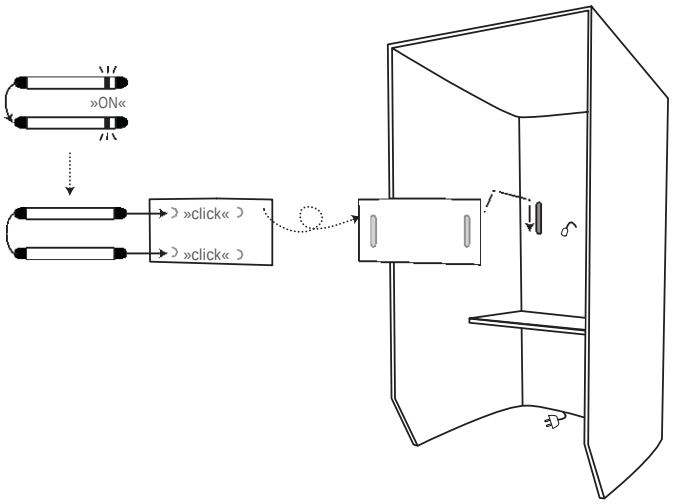

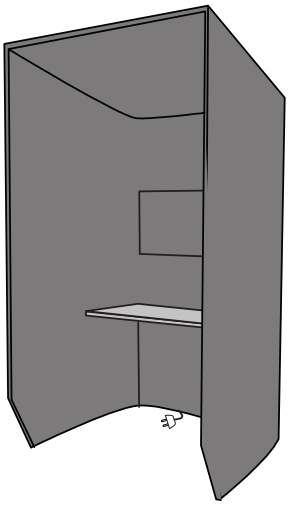

·BUZZI SPACE

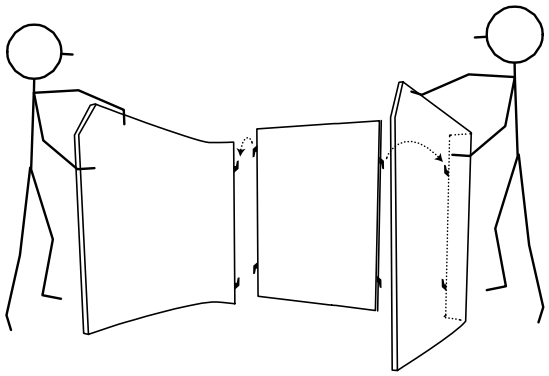

1.

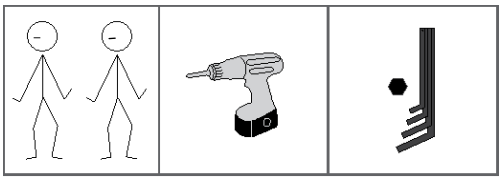

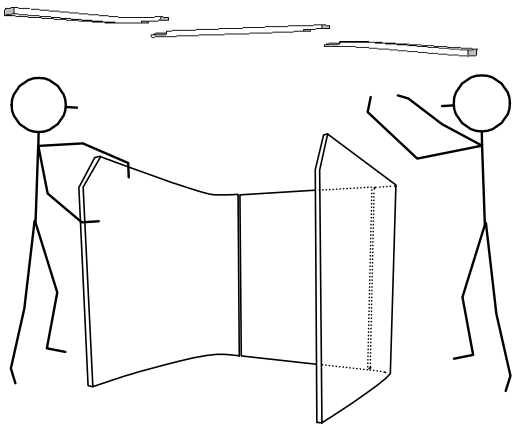

2.

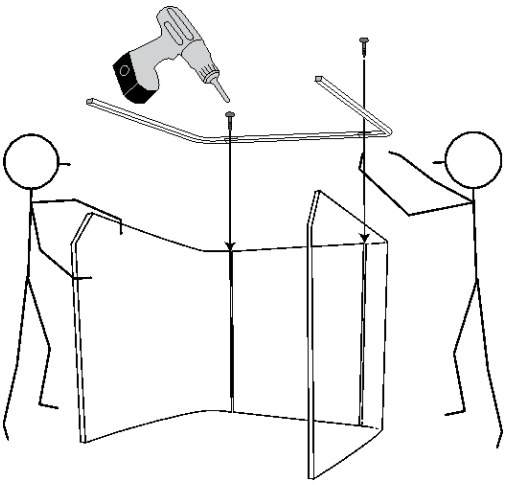

3.

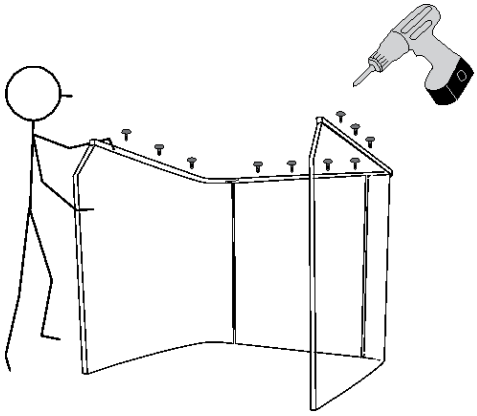

4.

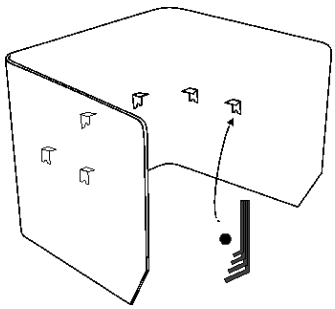

5.

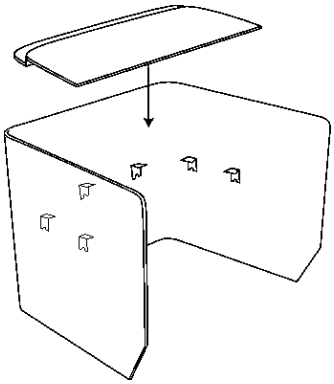

6.

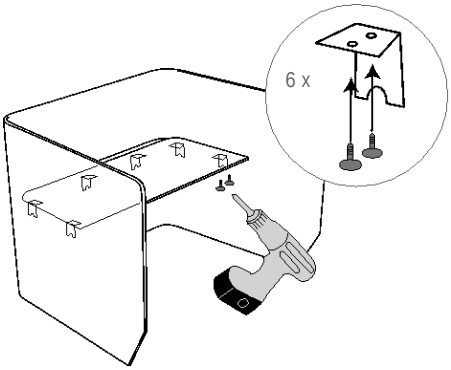
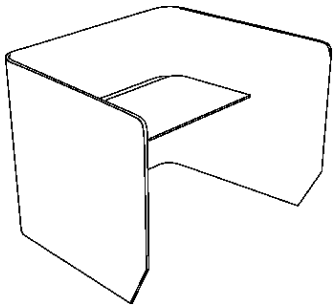
7.