De Projectinrichter

www.deprojectinrichter.com
088 - 650 12 34

BUZZIPATCH

1 set = 18 pcs : 1pc of every size, of every colour | 3 sizes | 6 fixed colours
no custom made

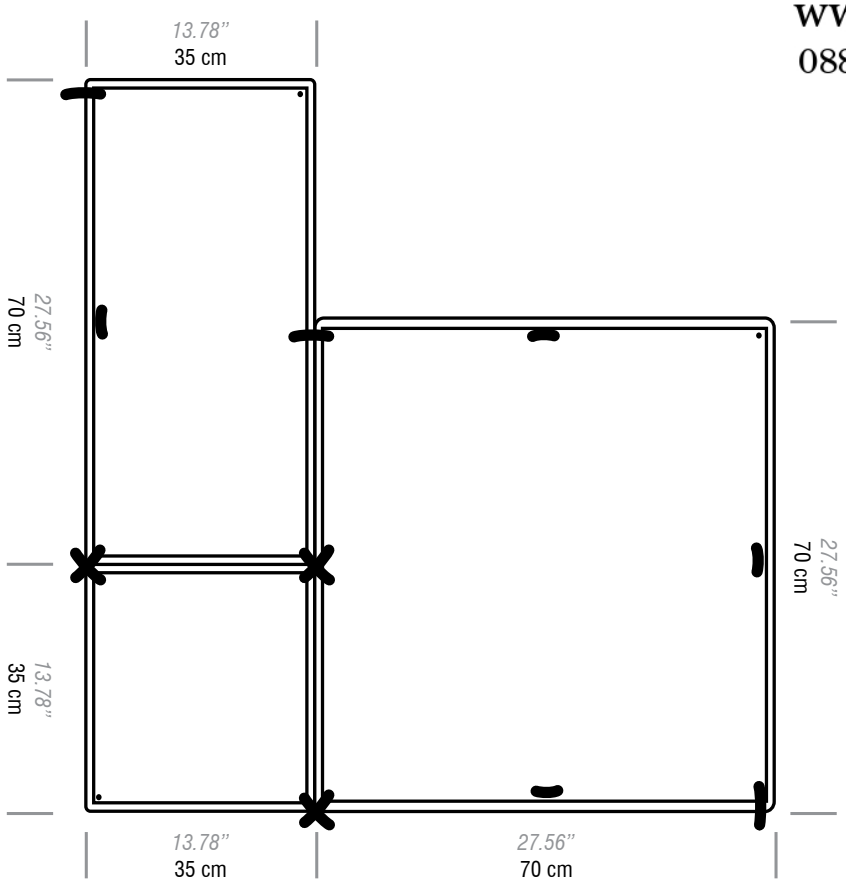

combinations:

English Library: Tartan Charcoal Multi F04 | Tartan Blue Multi X13 | Fabric Orange | Fabric Mint | Fabric Petrol | Terra Violet BM29

Misty Stones: Terra Willow BF 31 | Terra Sea Grass AP22 | Terra Lovat AN21 | Tartan Hessian B02 | Tartan Beige Natural R10 | Terra Buttermilk BB28

Forest Waterfalls: Tartan Blue Multi X13 | Fabric Aqua | Tartan Glacier D05 | Terra Willow BF31 | Terra Seagrass AP22 | Fabric Pistache

Charcoal Dust: Fabric Zwart | Terra Charcoal R10 | Terra Silver N08 | Terra Flint P09 | Tartan Charcoal Ecru U11 | Tartan Grey P21

·BUZZI SPACE

Errors and Omissions Excepted | Variation in colour, dimensions and density may occur!

Charcoal Dust

Forest Waterfalls

English Library

Misty Stones

De Projectinrichter

www.deprojectinrichter.com
088 - 650 12 34