De Projectinrichter

www.deprojectinrichter.com
088 - 650 12 34

PANCO

design Romano Marcato
2008

PANCO

Linear or sinuous, Panco is a system of modular table tops for leaning on, placing objects on etc. that can be used to articulate a space in a variety of ways. The lateral legs of the modules, in bent sheet metal and featuring a long vertical cut, afford the design a sleek, elegant feel.

PANCO

PANCO

PANCO

design Romano Marcato

2008

Modular system of high tables, available in two lengths and a curved element. Top in honeycomb board in several finishes. Legs in metal, powder coated, with adjustable feet.

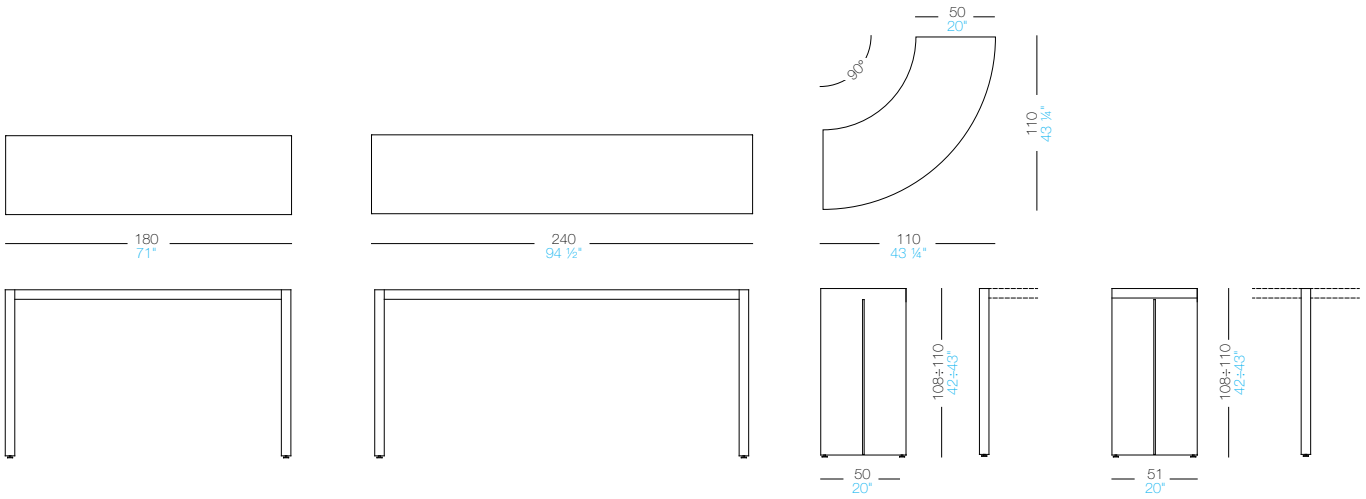

Frame

powder coated: black

powder coated: white

top

white laminate

blanched oak

black open pore

use and maintenance instructions

Clean all parts in wood, leather, fabric and metal with a damp cloth or a diluted neutral cleaner. Do not use cleaners with alcohol, bleach, solvent or abrasive products. Any liquid spilt on the product must be wiped up immediately.When lifting or moving the product, hold it on the structure and not under the seat. The product should not be subjected to unbalanced weights, as it is designed for a proper rest on the foothold (on four legs or on the base). Our company relieves from any responsibility in case of damage caused to fragile floors. Avoid any improper use of the product: do not step on the product, on the footrest or on the armrests. Avoid any movements that could compromise the proper functionality of the product or the safety of the users.Wood and leather, being natural materials, could be easily damaged. Small impurities or imperfections are within quality standard range.Do not expose the product to weather conditions or atmospheric agents, nor to heat sources over 45°C. Also products for outdoor use could be afflicted by atmospheric agents. The product could undergo possible exterior changes due to particular exposure to heat, humidity and saltiness. An appropriate and frequent maintenance and cleaning of the product enhances its durability. The product could change colour and shade, if exposed to direct sunlight. Maintenance has to be carried out by experienced staff. Dispose of the package only after assembling the product, in order to avoid the loss of ironmongery and components. Once the product has been dismantled, the product itself or its components must be given to the public garbage disposal system, according to the legislation in force.